Motion detector - Professional Line

IS 3180

PF - concealed, sq.
EAN 4007841 055769
Article number 055769



infrared sensor 180° | max. 20 m | max. 2000 W | IP20 | 2 - 1000 lux | 5 sec - 15 min | manual override | Ideal 2 m | Teach Teach mode | 5 years manufacturer's warranty steinel.de/garantie

Function description

For large areas. Infrared motion detector IS 3180 for indoors and out, ideal for watching over large areas, ideal installation height 2 m, 180° angle of coverage, reach 20 m max. or 8 m max. (tangential), heavy-duty relay for high switching capacity.

Technical specifications

Dimensions (L x W x H)	78 x 94 x 94 mm
With motion detector	Yes
Manufacturer's Warranty	5 years
Settings via	Remote control, Potentiometers, Smart Remote
With remote control	No
Version	PF - concealed, sq.
PU1, EAN	4007841055769
Type	Motion detectors
Application, place	Outdoors, Indoors
Application, room	corridor / aisle, function room / ancillary room, stairwell, multi-storey / underground car park, outdoors, all round the building, courtyard & driveway, Indoors
Colour	white
Colour, RAL	9003
Includes corner wall mount	No
Installation site	wall, corner

Power consumption	0,3 W
Technology, sensors	Mixed light metering, passive infrared
Voltage range (min)	220 V
Voltage range (max)	240 V
Mounting height	1,80 – 2,50 m
Mounting height max.	2,50 m
Optimum mounting height	2 m
Detection angle	180 °
Angle of aperture	90 °
Sneak-by guard	Yes
Capability of masking out individual segments	Yes
Electronic scalability	No
Mechanical scalability	No
Reach, radial	r = 3 m (14 m^2) / r = 4 m (25 m^2)
Reach, tangential	r = 6 m (57 m^2) / r = 20 m (628 m^2)
Switching zones	448 switching zones

Motion detector - Professional Line

IS 3180

PF - concealed, sq.
EAN 4007841 055769
Article number 055769

Technical specifications

Installation	Concealed wiring, Wall, corner
IP-rating	IP20
Ambient temperature	from -20 up to 50 °C
Material	Plastic
Mains power supply	220 – 240 V / 50 – 60 Hz
Fluorescent lamps, electronic ballast	1500 W
Fluorescent lamps, uncorrected	1000 VA
Fluorescent lamps, series-corrected	400 VA
Fluorescent lamps, parallel-corrected	400 VA
Switching output 1, low-voltage halogen lamps	2000 VA
LED lamps < 2 W	100 W
LED lamps > 2 W < 8 W	300 W
LED lamps > 8 W	600 W
Capacitive load in µF	176 µF

Cover material	shrouds
Functions	Normal / test mode, Manual ON / ON-OFF
Twilight setting	2 – 1000 lx
Time setting	5 s – 15 Min.
Basic light level function	No
Main light adjustable	No
Twilight setting TEACH	Yes
Constant-lighting control	No
Interconnection	Yes
Type of interconnection	Master/master
Interconnection via	Cable
Product category	Motion detector

Accessories

EAN 4007841 009151	Remote control Smart Remote
EAN 4007841 559410	Service remote control RC8
EAN 4007841 056728	Black cover for IR-sensors concealed, sq.

Motion detector - Professional Line

IS 3180

PF - concealed, sq.
EAN 4007841 055769
Article number 055769

Detection Zone

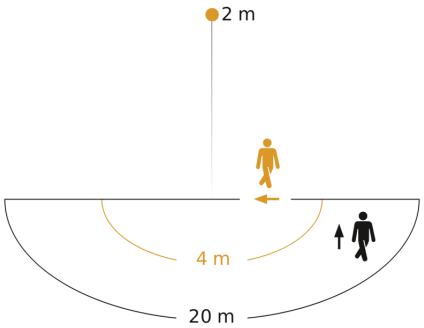

Possible mounting height: 1,80 m – 2,50 m
Orange: radial
Black: tangential

Dimension Drawing

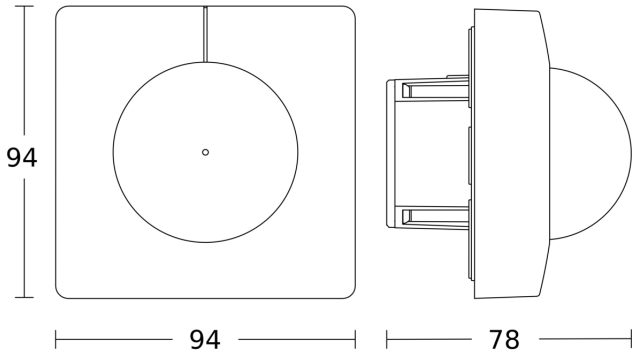

Master circuit diagram

