Motion detector - Professional Line

IS 3180

COM1 - concealed, sq.
EAN 4007841 055721
Article number 055721



IS 3180

COM1 - concealed, sq.
EAN 4007841 055721
Article number 055721

Master circuit diagram

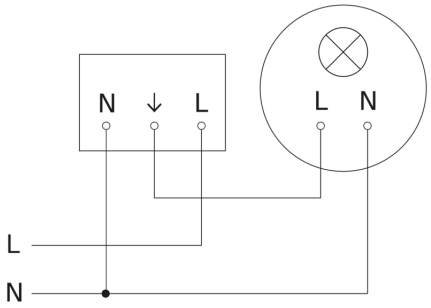

Master/slave interconnection circuit diagram

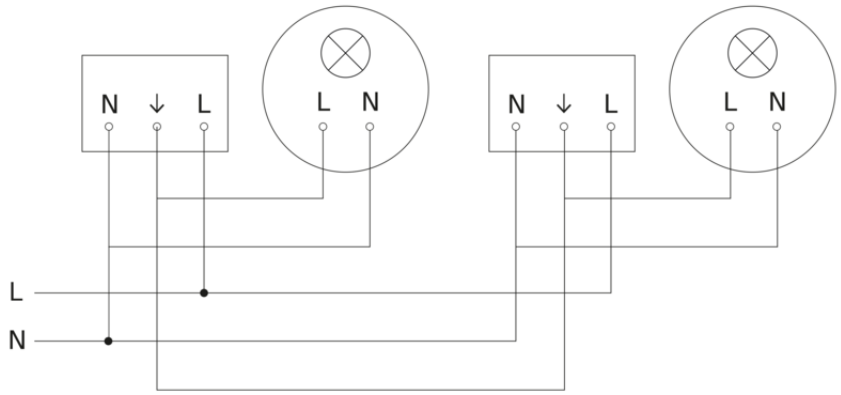

IS 3180

COM1 - concealed, sq.
EAN 4007841 055721
Article number 055721

Connection using two-circuit switch for manual and automatic operation

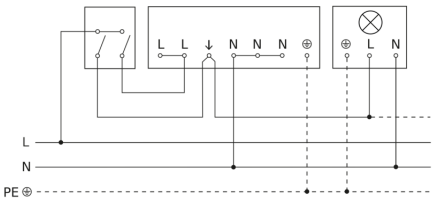

Connection of 4-fold push-button coupler to DALI2 APC

