Motion detector - Professional Line

# IS 3180

DALI-2 APC - surface, sq.
EAN 4007841 010553
Article number 010553



**Master circuit diagram**

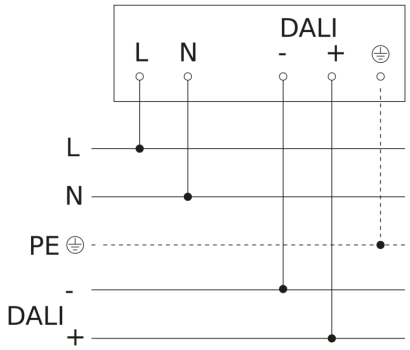


**Circuit diagram for interconnecting DALI-2 APC with DALI-2 IPD**

