Motion detector - Professional Line

IS 3180

DALI-2 APC - concealed, sq.
EAN 4007841 055738
Article number 055738



Master circuit diagram

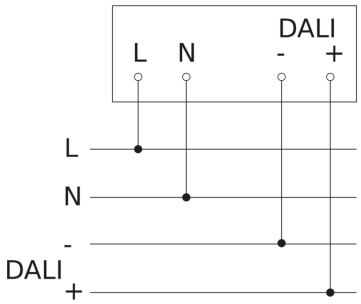

Circuit diagram for interconnecting DALI-2 APC with DALI-2 IPD

